TACOM - ACALA CHEMICAL NEWSLETTER

ESTABLISHED IN 1990

OCTOBER 1996

TABLE OF CONTENTS

SUBJECT **PAGE NUMBER**

TACOM-ACALA DA FORM 2028 CURRENT ADDRESS....1

AFTER DUTY HOURS-EMERGENCY REQUISITIONS-ACALA....1

HARD TO FIND DEPARTMENT OF DEFENSE ACTIVITY ADDRESS CODE (DODAAC)....1

M12A1 DECON SYSTEM, BASIC ISSUE ITEMS....2

MAINTENANCE EXPENDITURE LIMITS FOR M12A1 DECON....2

M291 DECONTAMINATING KIT, SKIN (NSN 6850-01-276-1905)....3

M12A1 DECONTAMINATING APPARATUS, SKID MOUNTED, 500 GALLON (NSN 4230-00-926-9488)....3

M157 GENERATOR SET, SMOKE, MECHANICAL: PULSE JET....4
W/80 GALLON FOG OIL TANK (NSN 1040-01-293-5496)
W/120 GALLON FOG OIL TANK (NSN 1040-01-206-0147)

M157 SMOKE GENERATOR FUEL/FOG OIL PUMP CORROSION PREVENTION....4

INSTALLATION PROCEDURES FOR MOUNTING THE M14 GAS PARTICULATE FILTER UNIT (GPFU) IN AN M113A2/A3 ARMORED PERSONNEL CARRIER (APC) ARMORED AMBULANCE....5-8

CHEMICAL AGENT MONITOR (CAM) DRIFT TUBE MODULE, (NSN 6665-01-383-6257)....9

CHEMICAL AGENT MONITOR (CAM) SCREW, SELF-LOCKING, (NSN 5305-01-386-6066)....9

CHEMICAL AGENT MONITOR (CAM) WIPE TEST PROCEDURES....10

M40/M42 SERIES (UNIVERSAL) FACEPIECE, BREATHING ASSEMBLY AS A REPAIR PART....11-13

M42 SERIES MASK....13

DEPARTMENT OF THE ARMY
AMSTA-AC-CTC
ARMAMENT AND CHEMICAL
ACQUISITION AND LOGISTICS ACTIVITY
ROCK ISLAND, IL 61299-7630

TO RECEIVE E-MAIL COPIES OF THE CHEMICAL NEWSLETTER CONTACT MARY HARTZEL
DSN 793-0663, mhartzel@ria-emh2.army.mil

TACOM-ACALA DA FORM 2028 CURRENT ADDRESS

As a reminder to all users, any changes to TACOM-ACALA Defensive Chemical Equipment Technical Manual's (TM) (Protective, Detector/Alarms, Smoke/Decon) will be sent to the following address via DA Form 2028, DA Form 2028-2, e-mail, etc.

Director
Armament and Chemical Acquisition and Logistic Activity (ACALA)
ATTN: AMSTA-AC-NML
Rock Island, IL 61299-7630

E-Mail: AMSTA-AC-NML@ria-emh2.army.mil

AFTER DUTY HOURS - EMERGENCY REQUISITIONS-ACALA

Use the following DSN phone number for requisition processing after duty hours:

DSN 793-4815

DSN phone number is for the Rock Island Arsenal Police, they will then contact for you, by beeper, the requisition processing person on duty at that time.

The POC is Roberta Wright, Item Manager, AMSTA-AC-CTC-P
DSN 793-5757, e-mail: rwright@ria-emh2.army.mil

HARD TO FIND DEPARTMENT OF DEFENSE ACTIVITY ADDRESS CODE (DODAAC)

The following information is for the DOL's shipping the equipment listed in the "reply to the report of excess" document using Routing Identifier Codes (RIC'S), C7T and AD1:

a. The DODAAC for C7T is CMAKL8; the address is TSI Incorporated, 500 Cardigan Road, St. Paul, MN 55164.

b. The DODAAC for AD1 is W41CE8; the address is XU USA Pine Bluff Arsenal, DEP OP FLD SVC STK, 10020 Kabrich Circle, Pine Bluff, AR 71602-9500.

The POC is Frank Fuoto, Item Manager AMSTA-AC-CTC-P,
DSN 793-4285, e-mail: ffuoto@ria-emh2.army.mil

M12A1 DECON SYSTEM, BASIC ISSUE ITEMS

The collapsible green canvas pail used for filling the prime tank on the M12 Pump unit is no longer available.

This is Item #6 on Page B-3 (BII Section) in TM 3-4230-209-10, dated Jun 86.

The replacement for this item is NSN 8465-00-128-6928, Pail Collapsible, 3 gallon. This item is safety yellow in color. The color issue was briefed to the Chemical School who concurred that it would not be an issue since the pail is kept in the onboard tool box of the M12 and rarely visible.

Please make the appropriate changes to TM 3-4230-209-10.

The POCs are:

Frances Fitzgerald, Item Manager, AMSTA-AC-CTC-S
DSN 793-5665, e-mail: ffritzgerald@ria-emh2.army.mil

Nick DeBolt, Equipment Specialist, AMSTA-AC-CTC-S
DSN 793-1696, e-mail: ndebolt@ria-emh2.army.mil

MAINTENANCE EXPENDITURE LIMITS FOR M12A1 DECON

ITEM: MAINTENANCE EXPENDITURE LIMITS FOR FSC GROUP 42, FSC CLASS 4230 AND 4240 (TB 42-0002-71 DTD MAR 82)

Updated information for the M12A1 Decontaminating Apparatus, LIN F81880, NSN 4230-00-926-9488, is shown below:

Current replacement cost: $21,626

Expenditure limit % age of item (years)	1-5	6-10	over 10
	90	70	30

The POC is Kent Schmitz, Maintenance Engineer, AMSTA-AC-CTC-S
DSN 793-4576, e-mail: kschmitz@ria-emh2.army.mil

M291 DECONTAMINATING KIT, SKIN (NSN 6850-01-276-1905)

The following corrections need to be made to the M291 Skin Decontaminating Kit, TM 3-4230-229-10, dtd Oct 89 w/change 1, dtd 28 Feb 91:

Transmittal Page, Change 1	Delete	(NSN 4230-01-251-8702)
	Substitute	(NSN 6850-01-276-1905)
Page 1-1, Para 1-1.b.	Delete	4230-01-276-1905
	Substitute	6850-01-276-1905

The POC is Nick DeBolt, Equipment Specialist, AMSTA-AC-CTC-S
DSN 793-1696, e-mail: ndebolt@ria-emh2.army.mil

M12A1 DECONTAMINATING APPARATUS, SKID-MOUNTED, 500-GALLON (NSN 4230-00-926-9488)

The following corrections need to be made to TM 3-4230-209-10, Jun 86 w/Change 1, 5 Dec 86:

Page 2-18, Para c.	Delete	"Four units are and incomplete or damaged."
	Substitute	"If one or more of the four units are incomplete, damaged or inoperable."

The POC is Nick DeBolt, Equipment Specialist, AMSTA-AC-CTC-S
DSN 793-1696, e-mail: ndebolt@ria-emh2.army.mil

M157 GENERATOR SET, SMOKE, MECHANICAL: PULSE JET W/80 GALLON FOG OIL TANK (NSN 1040-01-293-5496) W/120 GALLON FOG OIL TANK, (NSN 1040-01-206-0147)

When replacing fuel solenoid valve (Item 10, Fig F-3, TM 3-1040-279-12&P) you may receive a Honeywell made solenoid valve with the ports marked with NUMBERS instead of LETTERS, but the TM uses the port LETTER. To avoid this confusion, upcoming Change 4 will correct this problem. Until Change 4 is printed and distributed, you need to make the corrections shown below to TM 3-1040-279-12&P, 22 May 87, w/Change 1, 18 Nov 87; Change 2, 13 Mar 89; Change 3, 23 May 90:

Page 4-40, INSTALLATION "Add" under NOTE

Port A = 1 = "OUTLET"

Port P = 2 = "INLET"

Port(*) = 3 = "RETURN LINE, FUEL TEST POINT AND FUEL PRESSURE SWITCH"

(*) unmarked

The POC is Phil Dickey, Equipment Specialist, AMSTA-AC-CTC-S
DSN 793-0373, e-mail: pdickey@ria-emh2.army.mil

M157 SMOKE GENERATOR FUEL/FOG OIL PUMP CORROSION PREVENTION

If the M157 Smoke Generator sits idle for more than a week, CORROSION forms in the Fuel Pump and Fog Oil Pump, rusting and locking up both pumps, which make your M157 Not Fully Mission Capable. To avoid this problem with corrosion, do the following:

a. Hook up the fuel pump of each M54 Smoke Generator to a DIESEL fuel can and let the fuel pump run five minutes. The diesel fuel keeps the pump lubricated. Once a week is enough when the M157 is idle.

b. Do the same with the Fog Oil Pump, but use FOG OIL instead of diesel for each fog oil pump assembly.

The POC is Phil Dickey, Equipment Specialist, AMSTA-AC-CTC-S
DSN 793-0373, e-mail: pdickey@ria-emh2.army.mil

INSTALLATION PROCEDURES FOR MOUNTING THE M14 GAS PARTICULATE FILTER UNIT (GPFU) IN AN M113A2/A3 ARMORED PERSONNEL CARRIER (APC) ARMORED AMBULANCE

For all of you who have asked, TB 9-2350-200-24 is available to help you install the M14 in the M113A2/A3 Armored Ambulance, NSN 2350-01-219-7577. This TB is currently available through the regular channels.

ACALA's Chemical Defensive Equipment Team personnel, have recently installed an M14 GPFU in both the A2 and the A3, and encountered only minor problems using TB 9-2350-200-24. One thing to remember is that the A2/A3 configuration has many different models and the TB cannot cover every configuration when it comes to mounting the hoses, switch assembly., etc.

The advance DRAFT copy of Change 1 to TACOM-Warren's TM 9-2350-277-20-3 includes a lot more model specific information for installing the M14 GPFU than the TB. Change 1 is not yet available, but will be soon.

Some of the problems we ran into and the possible solutions follow:

WARNING

Before beginning the modification make sure that the Vehicle's battery ground strap is removed (Refer to Operator's M113 Manual). This step is very important.

PROBLEM:
We had left over parts from the M37 Installation Kit (IK), which is included with the M14 GPFU Installation Package.

SOLUTION:
There are a lot of parts that you will not need in the IK since the M14 can be installed in both the M113A2 and the A3, and the APC. Return the left overs to the supply system.

PROBLEM:
Hose location

SOLUTION:
TB 9-2350-200-24 is very vague in the information provided to the user. There is a hose installation drawing in the Advance Draft copy of TM 9-2350-277-20-3.
NOTE: HOSE INSTALLATION DRAWING IS SHOWN AT THE END OF THIS ARTICLE.

PROBLEM:
We needed an additional six foot hose with a quick disconnect for the commander's (TC's) M25 Mask.

SOLUTION:
There are NSNs listed in the TB for additional hoses with proper fittings for the M25 Mask. Just order what you need from the supply system.

PROBLEM:
The M37 installation kit's screw thread sizes, which are used to attach the hose clamps to the hull top plate, were too small for the holes that we used for these clamps.

SOLUTION:
We used the holes for the spall liner track which is not used for the armored ambulance. We subsequently used 3/4 inch screws and larger hose clamps, NSN 5340-01-145-8303 and 5340-01-165-0580.

NOTE: From my observations it appears that there are different hole sizes and mounting locations for the different models of the M113 APC. This is a case where you have to improvise. TB 9-2350-200-24 states that you can secure the hoses to existing wire harnesses with plastic tiedown straps or clamps. Route the hoses in the carrier as required. **NOTE: HOSE INSTALLATION DRAWING IS SHOWN AT THE END OF THIS ARTICLE.**

PROBLEM:
The illustration in the TB is not very clear as to where to attach the Circuit Breaker and Switch Assembly (CBSA).

SOLUTION:
We mounted our CBSA under the heater control panel behind the driver and to his left. You may be able to mount it under the control panel if there's room. Where it is intended to go is on the transverse beam. Additionally, there is a cover for the CBSA in the Draft Change 1 being prepared by TACOM-Warren. Change 1 is not yet available, but will be soon. (Cage 19207, P/N 12381966)

PROBLEM:
The shock mounts on which the M14 GPFU's M2A2, Air Purifier is mounted are not included with the kit. Nor is there a good reference in the TB for the NSN or a TM reference. The NSN for the CBR Shock Mounting Kit, NSN 2540-00-226-1561, which is listed on Page 1-1 of TB 9-2350-200-24 is no longer valid. The source code is PF which says that the kit is centrally procured and can be obtained from the PM for the M113.

SOLUTION:
The CBR Shock Mounting Kit is located in both TM 9-2350-261-24P (M113A2) and TM 9-2350-274-24P (M113A3). The CAGEC and Part Number are 19207-5703654. There is no NSN for this item, you have to order all the parts. The parts are the following:

CAGEC	PART NUMBER	NOMENCLATURE
96906	MS35207-263	Screw, Machine
96906	MS90727-10	Screw, Cap Hexagon
88044	AN970-4	Washer, Flat
88044	AN8008028	Mount Resilient *
96906	MS21044N4	Nut, Self-Locking
96906	MS27183-8	Washer, Flat
96906	MS21044N3	Nut, Self-Locking

* We found an alternate part number and NSN for this mount which works if there are none of the above in stock, CAGEC 19207, Part Number 12381982, NSN 5340-01-407-7854.

PROBLEM:
We couldn't aline the fifth shock mount with the hole in the frame assembly to mount the M2A2 . (Refer to TB 9-2350-200-24, Page 1-11)

SOLUTION:
There really isn't a good solution to this yet. Apparently before APC serial number MU3011684, the M2A2 Air Purifier with frame was to be mounted on a bracket that would have raised the M2A2 about three inches. Then an additional bracket would have been necessary to aline the holes on the shock mounts to the frame assembly. For our installation we had a vehicle before this serial number which didn't have the bracket. Our problem was the fifth shock mount that didn't aline horizontally with the frame's mounting hole. The hole was about two inches to the right of the shock mount. We fabricated an extension of sorts to match the hole to the mount.

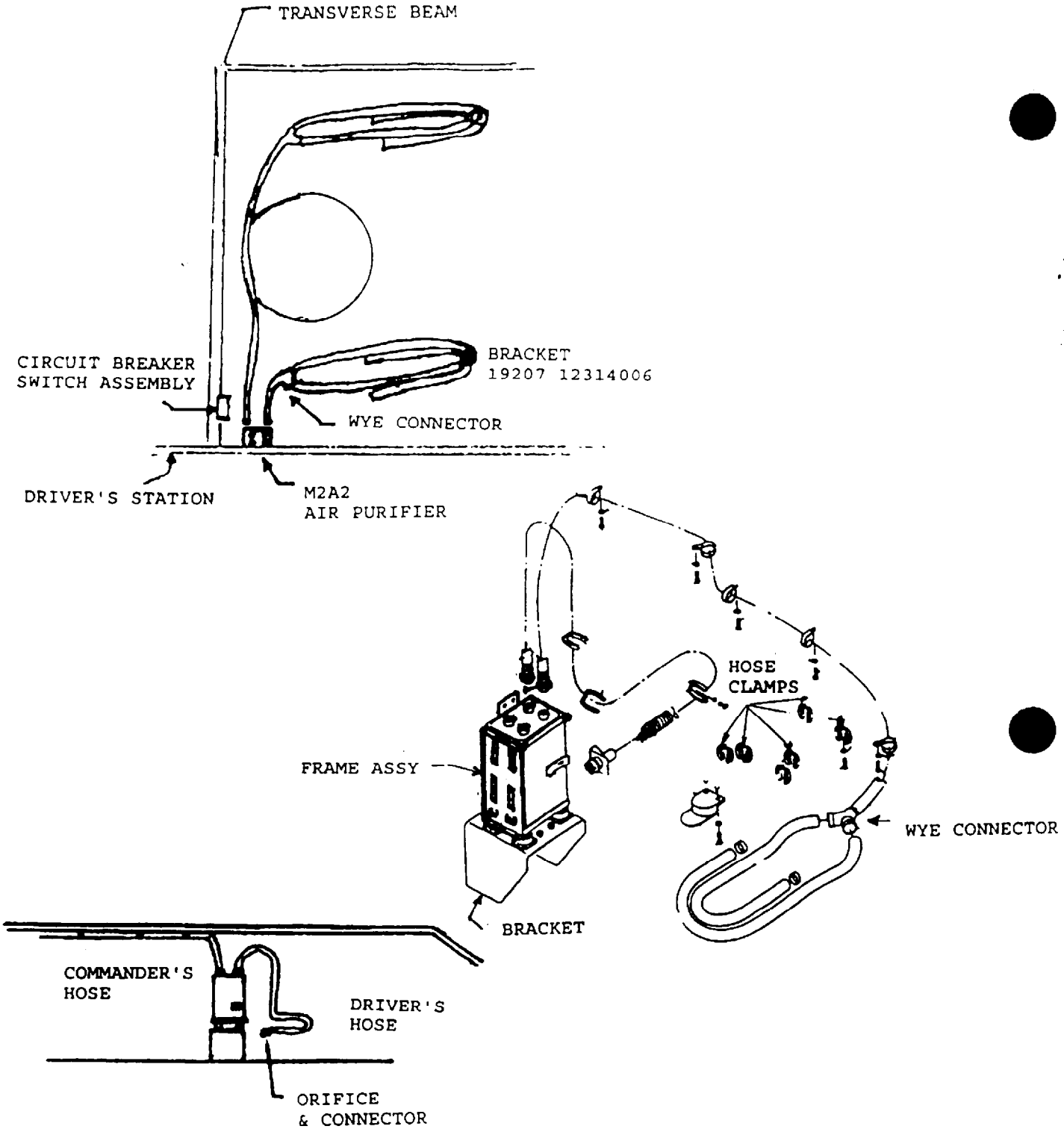

HOSE INSTALLATION

The POC is Linda Sutherland, Equipment Specialist, AMSTA-AC-CTC-S
DSN 793-2280, e mail: lsutherl@ria-emh2.army.mil

CHEMICAL AGENT MONITOR (CAM)
DRIFT TUBE MODULE (NSN 6665-01-383-6257)

Don't expect a brand new drift tube module to work immediately when you put it into the CAM. It usually needs several hours of run time before the peaks appear normal. It may sometimes be necessary to treat it as a CAM that has been in storage and run the CAM for up to three days.

There is also a condition, sometimes seen with new drift tube modules, where the sieve material is so dry, that there is not enough water to form the correct reactant ion peak in the H mode. You can recognize this by the fact that both G and H mode RIPs are in the proper place and the G/H timing ratio is correct, but the CAM will not respond to the H mode confidence test. To fix, try running the CAM for up to eight hours with the nozzle protective cap removed and a filtered nozzle standoff in place on the nozzle. The run time without the cap should allow enough water to create the correct H mode RIP. If the CAM responds after this procedure, let the bars clear down, run for five more minutes, then shut off the CAM. You're good to go!

The POC is Lou Kosydar, Systems Engineer, AMCPM-NNC
DSN 584-2147, e-mail: lpkosyda@cbdcom.apgea.army.mil

CHEMICAL AGENT MONITOR (CAM)
SCREW, SELF-LOCKING (NSN 5305-01-386-6066)

If you need a replacement of this item, don't order from the depot. This item is available from PM stock. Contact us, and we'll ship the screw to you at no charge.

The POC is Alonzo White, Maintenance Systems Manager, AMCPM-NNC
DSN 584-6565, e-mail: alwhite@cbdcom.apgea.army.mil

CHEMICAL AGENT MONITOR (CAM)
WIPE TEST PROCEDURES

This is a reminder that all wipe test samples for the CAM are to be sent to the Rock Island Materials Lab for analysis and reporting. The correct mailing address is shown below:

Commander
Rock Island Arsenal
Building 210, Room 407
SIORI-SEL (Radiation Swipe Samples)
Rock Island, IL 61299-5000

If you're waiting for results before performing CAM maintenance, mark the outer envelope as follows: "PLEASE EXPEDITE--MAINTENANCE SAMPLES." This notice will alert the lab to process your wipe tests immediately.

Remember to include your name, DSN phone number, and fax number so you can be sent the test results.

The POC is Jean Salvatore, ILS Manager, AMCPM-NNC
DSN 584-6513, e-mail: jmsalvat@cbdcom.apgea.army.mil

M40/M42 SERIES (UNIVERSAL) FACEPIECE, BREATHING ASSEMBLY AS A REPAIR PART

Reference Advisory Message 031927Z Jun 96 SAB.

Referenced message gave a "HEADS UP" notice of the facepiece breathing assembly becoming a repair part.

BACKGROUND. A cost savings idea has been implemented which makes the facepiece breathing assembly a repair part. Presently when a mask facepiece is not repairable at unit level the entire mask and all accessories are turned-in. Under the new procedure, all the accessories will be retained and only the unserviceable mask facepiece breathing assembly is turned-in resulting in a considerable savings to the Army.

Unit OMA funding will be required to pay for the replacement facepiece breathing assembly, and other associated accessories or parts.

Initial issue or additional complete mask assembly requirements as a result of authorization increases will remain free issues.

NOTE: The Mask Assembly is a facepiece breathing assembly with all other accessories.

PROCEDURE. As of 1 Oct 96 the following procedure will be in affect.

a. When a facepiece breathing assembly (a facepiece with all it's basic components installed, to include headhamess) becomes unserviceable, beyond TM 3-4240-300-20&P repair level, the mask will be reported as excess unserviceable for disposition in accordance with AR 725-50, Chapter 7. (Reply to report of excess, will have the ship to address.)

b. A replacement facepiece breathing assembly of the same size should be requisitioned.

Small - NSN 4240-01-415-4517
Medium - NSN 4240-01-415-4518
Large - NSN 4140-01-416-0430

c. In addition to the new replacement facepiece assembly for the M42 and M42A1 Masks a detachable external Microphone Assembly, NSN 5965-01-414-2257, @ $14.32 will also need to be requisitioned. For M42's (only) a Hose Assembly (detachable), NSN 4240-01-378-6479 @ $28.05 will also be required.

NOTE: With the addition of the new detachable external Microphone Assembly to the new Facepiece Breathing Assembly the mask becomes an M42A2. The Operator TM 3-4240-343-10, dtd Mar 96 should be requested from publications for each new mask.

d. M42/M42A1 series mask users may also request a new larger mask carrier specifically for the M42 series, NSN 4240-01-399-3350 @ $12.37.

e. All mask accessories (i.e., Second Skin, Optical Inserts, Outserts, Mask and Canister Carriers, (TM, should be replaced with TM 3-4240-343-10) Plastic Bag M1, Canister (Hose M42A1's only) will be retained by the unit to be reused with the replacement Facepiece Breathing Assembly.

f. The unserviceable Facepiece Breathing Assembly to be turned-in must be complete will all it's basic components; (all Valves, Side Voicemitter, Headharness, Outlet Valve Cover, Internal and External Drink Tubes, Airflow Deflector, Outlet Valve Cover (Microphone and Cable M42's) and Faceforms).

g. PACKAGING.

(1) Loosen Headharness Straps and install packaging faceform into Mask Facepiece cavity. Secure Microphone Cable in faceform cavity with a piece of tape (M42/M42A1's only). Place M42 Hose curled in the faceform cavity. Tighten the Headharness straps evenly around faceform.

(2) Wrap Mask Facepiece with one complete turn of cushioning material TM 3-4240-300-20&P (Item 20, App D). Overlap and secure ends with tape (Item 21, App D).

(3) Place Facepiece Assembly packaged as above, (maximum ten each) in one layer into a weather-resistant shipping container (Item 19, App D) or equivalent. The voids in box shall be filled with cushioning material (Item 20, App D).

(4) OCONUS locations, should pack the shipping container into a wooden shipping container (Item 19, App D). Us six cleated box fasteners to secure box lid, applying two on each side and one on each end.

(5) Secure a shipping document envelope on the side of the shipping container with an enclosed DD Form 134 for each NSN being shipped (AR 725-50, Sec II, PAR 7-11).

h. TM's will be revised to reflect the above change in the next revision.

The POC is Lenn Winters, Equipment Specialist, AMCPM-NNM-M
DSN 584-2238, e mail: lxwinter@cbdcomapgea.army.mil

M42 SERIES MASK

The hose on the M42 Mask is glued to the facepiece and permanently attached, it is not authorized to be removed at unit level. Hoses which have been removed and re-installed are considered unsafe/unserviceable and must be turned-in. M41 PATS testing is not considered adequate to certify proper mask serviceability for this "Unauthorized Removal" of the hose.

M42A1 Masks have a detachable hose. The design purpose is to provide flexibility of mounting the hose on either side of a facepiece and for economy of not rendering a mask unserviceable if the hose is damaged. The M42 Series Mask Hose is intended to be attached to the facepiece and be coupled with the Gas Particulate Filter Unit (GPFU) on the combat vehicle. This provides the user unrestricted sighting, greater CB protection, temperature controlled air and reduced breathing resistance. It has come to our attention that some soldiers are removing the hose and mounting the filter canister to the mask facepiece.

This may appear to be practical/convenient. Some cautions to consider are:

a. Canisters may interfere with sighting instruments.

b. Loss, mishandling and damage of hoses and canister carriers assemblies.

c. Immediate availability for deployment.

In units equipped with the M42A1 o M42A2 Masks, commanders may choose to establish local SOP's as to if or when hose removal may be authorized, with proper safeguards to ensure removal component accountability, maintenance and availability.

The POC is Lenn Winters, Equipment Specialist, AMCPM-NNM-M
DSN 584-2238, e mail: lxwinter@cbdcomapgea.army.mil